Nuclear Instruments and Methods in Physics Research A 649 (2011) 87–90

Contents lists available at ScienceDirect

Nuclear Instruments and Methods in Physics Research A

journal homepage: www.elsevier.com/locate/nima

Control system for the 2nd generation Berkeley automounters (BAM2) at GM/CA-CAT macromolecular crystallography beamlines

O. Makarov [a,*], M. Hilgart [a], C. Ogata [a], S. Pothineni [a], C. Cork [b]

[a] GM/CA-CAT, Biosciences Division, Argonne National Laboratory, Argonne, IL 60439, USA
[b] Physical Biosciences Division, Lawrence Berkeley National Laboratory, Berkeley, CA 94720, USA

ARTICLE INFO

Available online 5 January 2011

Keywords:
Control software
Automounter
Macromolecular crystallography

ABSTRACT

GM/CA-CAT at Sector 23 of the Advanced Photon Source (APS) is an NIH funded facility for crystallographic structure determination of biological macromolecules by X-ray diffraction.

A second-generation Berkeley automounter is being integrated into the beamline control system at the 23BM experimental station. This new device replaces the previous all-pneumatic gripper motions with a combination of pneumatics and XYZ motorized linear stages. The latter adds a higher degree of flexibility to the robot including auto-alignment capability, accommodation of a larger capacity sample Dewar of arbitrary shape, and support for advanced operations such as crystal washing, while preserving the overall simplicity and efficiency of the Berkeley automounter design.

Published by Elsevier B.V.

1. BAM2 advantage

A good overview on robotic sample handling for macromolecular crystallography is available at the SSRL/SMB website [1]. Robotic systems used at the X-ray beamlines are compared in Table 1.

Table 1
Robotic systems used at the synchrotron beamlines.

Robotic system	Design solution	Number of samples
MAR CSC	Motorized stages	1 carousel of 19
MAATEL SC3	Motorized stages	5 baskets of 10
Rigaku ACTOR	6-axis industrial robotic arm, pneumatic gripper.	5 magazines of 12 or 5 pucks of 16
Stanford SAM	Motorized arm: 3 rotation and 1 translation stages, pneumatic gripper	3 cassettes of 96
Berkeley ALS (BAM1)	Three linear and one 90° rotary pneumatic stages+motorized Dewar rotation and translation, pneumatic gripper.	7 pucks of 16
IRELEC CATS	6-axis industrial robotic arm, pneumatic gripper.	9 pucks of 16
Berkeley BAM2 [2]	Three motorized linear [3] and one 90° pneumatic rotary stages, stationary foam Dewar, pneumatic gripper.	9 pucks of 16

BAM2 automounter design solutions offer a few advantages over the previous BAM1 model. A combination of a force sensor at the gripper and servo-motor driven stages enables automatic alignment of the gripper to the pucks in the Dewar as well as to the goniometer. Sample mount position at the goniometer can be selected through the software. This allows for easy switching between different sample pin lengths, while in the previous model one had to reposition a hard stop on the pneumatic stage to change a sample mount position. Automounter uses a stationary foam Dewar with low maintenance cost. Dewar has a high sample capacity – 144 samples in 9 pucks. Robot motions are easier to program in the Cartesian coordinate system as compared

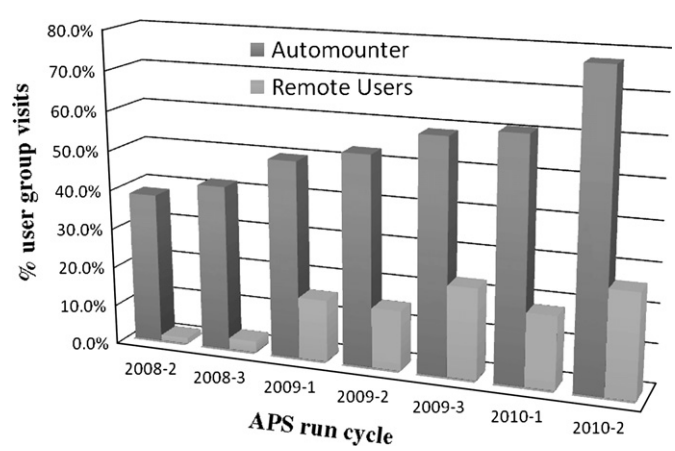

Fig. 1. Use of automounters and remote operations at the GM/CA-CAT insertion device beamlines.

* Corresponding author.
E-mail address: makarov@anl.gov (O. Makarov).

0168-9002/$ - see front matter Published by Elsevier B.V.
doi:10.1016/j.nima.2010.12.244

to the motions of 6-axis industrial robotic arm. Because of smaller BAM2 motion space comparing with robotic arms, risks of collisions in the case of hardware/software malfunction are lower. It is an important consideration taking into account the high cost of CCD-based area detectors. The same consideration also applies to the safety of operators.

Automounters enable data collection for remote users and prove to be a valuable part of the beamline instrumentation to

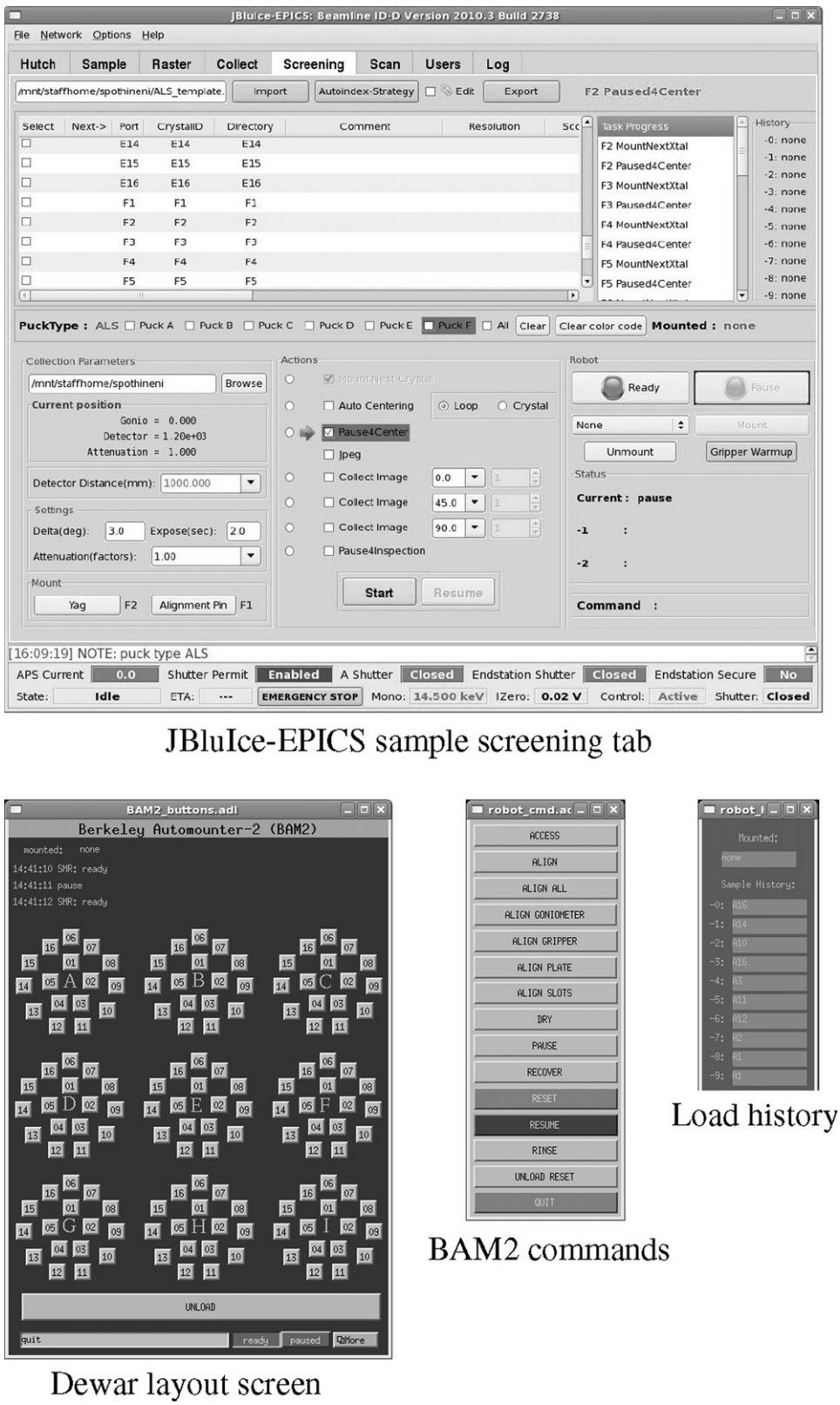

Fig. 2. JBluIce-EPICS and MEDM screens.

boost productivity. Increase in the use of automounters and remote operations at the GM/CA-CAT insertion device beamlines for the last two years is shown in Fig. 1.

2. Beamline control system integration

The robot controller uses the Adept V+ real-time, multi-tasking operating system. A Commander interface was written in Java to communicate to the Adept controller over Modbus TCP. This program is used to generate sequences of robot actions. In order to integrate the Commander with the EPICS system used to control the GM/CA-CAT beamlines, the interface has been expanded to include monitoring EPICS process variables over Java channel access (JCA) that link it to a higher level GM/CA-CAT EPICS robot server [3] written in the State Notation language. The latter provides a control interface to the user and staff accessible EPICS clients on the beamline control side, such as beamline control scripts, JBluIce-EPICS [4] graphical user interface, or EPICS MEDM control screens (Fig. 2)

Users control the beamline with the JBluIce-EPICS graphical interface to perform X-ray diffraction data collection. The GUI interacts with the automounter via an EPICS SNL program called "Robot server" initially developed for BAM1 [5] and now adapted for BAM2. We have introduced a set of four EPICS process variables (PVs). A command line interface of CAM-commander (automounter control program) was modified to use these PVs: ⟨*beamline*⟩:*BAM2*:*cmd* – for command, ⟨*beamline*⟩:*BAM2*:*ack* – for command acknowledgement, ⟨*beamline*⟩:*BAM2*:*rsp* – for reporting completion of the action, and ⟨*beamline*⟩:*BAM2*:*err* – for reporting an error condition. CAM-EPICS-commander uses the Java channel access library to access these PVs. Our original EPICS robot server was modified to use these EPICS PVs to interface the CAM-EPICS-commander. The robot server moves the goniometer to a predefined load position before a load/unload request; it keeps a history of the last ten mounted samples. In the case of the load request, if a sample is mounted on the goniometer, the server will issue an unload request prior to making a request to load a new sample. The Adept Desktop IDE [6] is used for initial setup of the automounter controller. Arrows on the block diagram (Fig. 3) show communication between the control system components.

3. Conclusion

A new second-generation Berkeley automounter has been installed at the 23BM-B experimental station (Fig. 4). Initial integration of the automounter control program with beamline control software is done by virtue of four EPICS PVs bridging the automounter server and the beamline server. The work in progress is to merge the CAM-EPICS-commander and the GM/CA-CAT EPICS robot server to provide an integrated system with a streamlined interface to the experimentalist. Our commissioning plans include adding new features (such as support for Rigaku magazines, support for goniometer alignment tools, etc.) to the robot control program and optimization for faster operation. After commissioning we are planning to move BAM2 robot to the 23ID-B beamline, which is in high demand from users. Also, we are planning to retrofit our automounters of the first generation with servo-motor driven linear stages and force sensors that will add an auto-alignment capability.

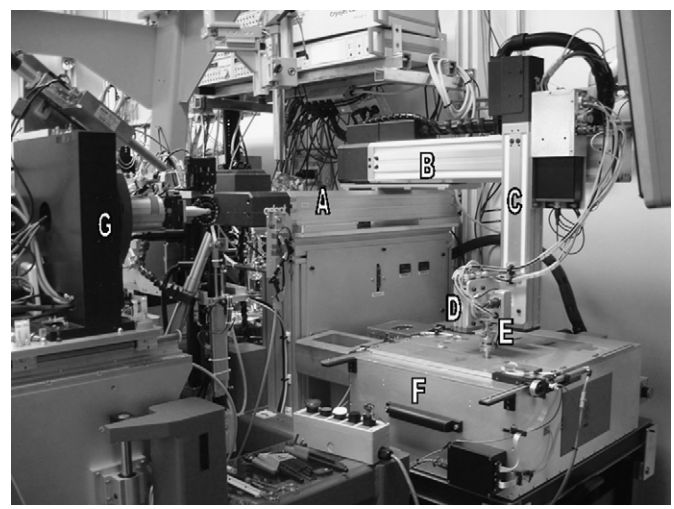

Fig. 4. Automounter BAM2 at the 23BM-B experimental station. A, B, C – motorized linear stages, D – pneumatic 90° rotary stage, E – gripper plunged into the Dewar, F – Dewar, and G – goniometer.

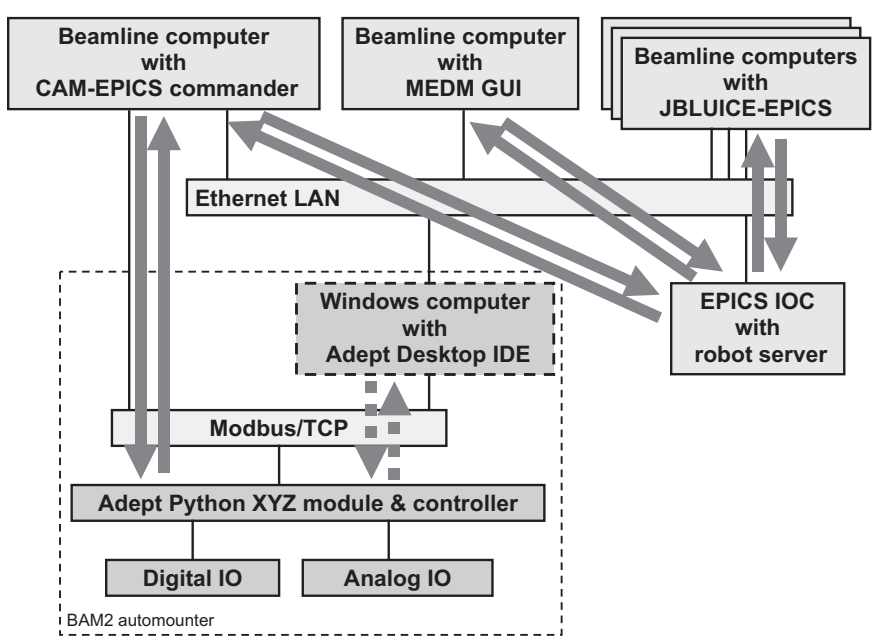

Fig. 3. Integration of the BAM2 automounter into the beamline control system.

Acknowledgements

GM/CA-CAT is supported by the National Institute of General Medical Sciences (Y1-GM-1104) and the National Cancer Institute (Y1-CO-1020) of the US National Institutes of Health.

References

[1] Robotic sample handling, 〈http://smb.slac.stanford.edu/facilities/hardware/SAM/robosync/〉.
[2] L.C. Yarris, Berkeley Lab Gets NIH Grant for second generation of automounter robots, 〈http://www.lbl.gov/Science-Articles/Archive/PBD-NIH-robots.html〉.
[3] Adept Python linear modules, 〈http://www.adept.com/products/robots/linear-modules/python/general〉.
[4] JBluIce-EPICS control system for macromolecular crystallography. S. Stepanov, O. Makarov, M. Hilgart, S.B. Pothineni, A. Urakhchin, S. Devarapalli, D. Yoder, M. Becker, C. Ogata, R. Sanishvili, N. Venugopalan, J.L. Smith, R. Fischetti, Acta Crystallographica Section D—Biological Crystallography, in: E.N. Baker, Z. Dauter (Eds.), accepted for publication, ISSN 0907-4449.
[5] EPICS controlled sample mounting robots at the GM/CA CAT. O.A. Makarov, R. Benn, S. Corcoran, S. Devarapalli, R. Fischetti, M. Hilgart, W.W. Smith, S. Stepanov and S. Xu. Nucl. Instr. and Meth. A, Vol. 582, pp.156-158 (2007).
[6] Adept DeskTop, 〈http://www.adept.com/products/software/pc/desktop/general〉.